FURNITURE LEISURE INC

1.800.213.2401 | SALES@FURNITURELEISURE.COM

FurnitureLeisure.com
PicnicFurniture.com
ParkTables.com

PoolFurnitureSupply.com
PicnicTableSupplier.com
UBrace.com

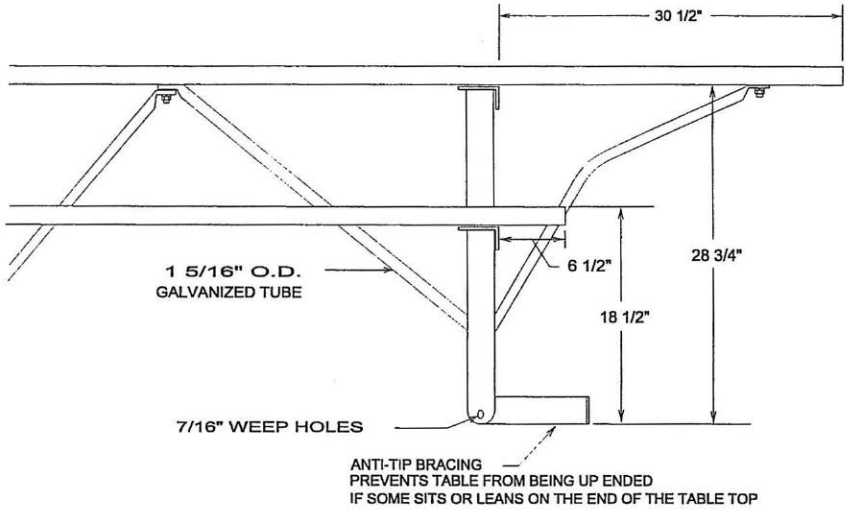

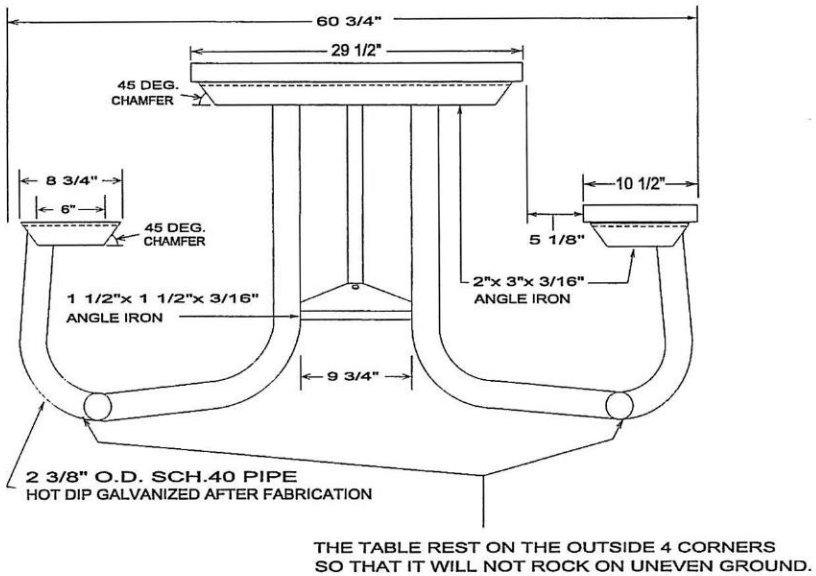

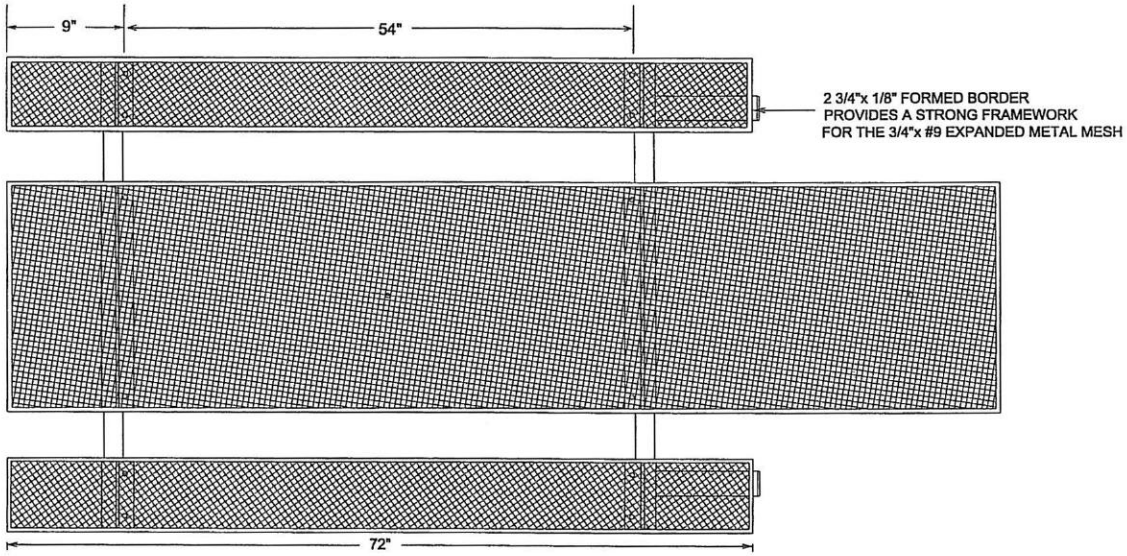

MEETS ADA REQUIRMENTS FOR END WHEELCHAIR ACCESS

MODEL 8J2GVP-EWC			WT. 325 lbs
DRAWN BY CKB	DATE 1/14/00		SCALE NONE