FURNITURE LEISURE INC

1.800.213.2401 | SALES@FURNITURELEISURE.COM

FurnitureLeisure.com
PicnicFurniture.com
ParkTables.com

PoolFurnitureSupply.com
PicnicTableSupplier.com
UBrace.com

ITEM NO.	PART NUMBER	DESCRIPTION	Default /QTY.
1	RTR-230S	D RING TABLE LEG BRACKET	1
2	RTR-SA1	RTR LEG	6
3	RVP-8	EXPANDED METAL VINYL COATED SEAT	3
4	RTR-9HS	RT FIBERGLASS TOP 3 SEAT ADA	1
5	RTR-SA4	RTR BOTTOM UMB HOLDER ASSY	1
6	HBOLT 0.3750-16x2.75x1-N		12
7	HEX-3/8X112	HEX BOLT 3/8" x 1 1/2"	12
8	LOCKW-3/8	LOCK WASHER 3/8"	36
9	HNUT 0.3750-16-D-N		24
10	Preferred Wide FW 0.375		42

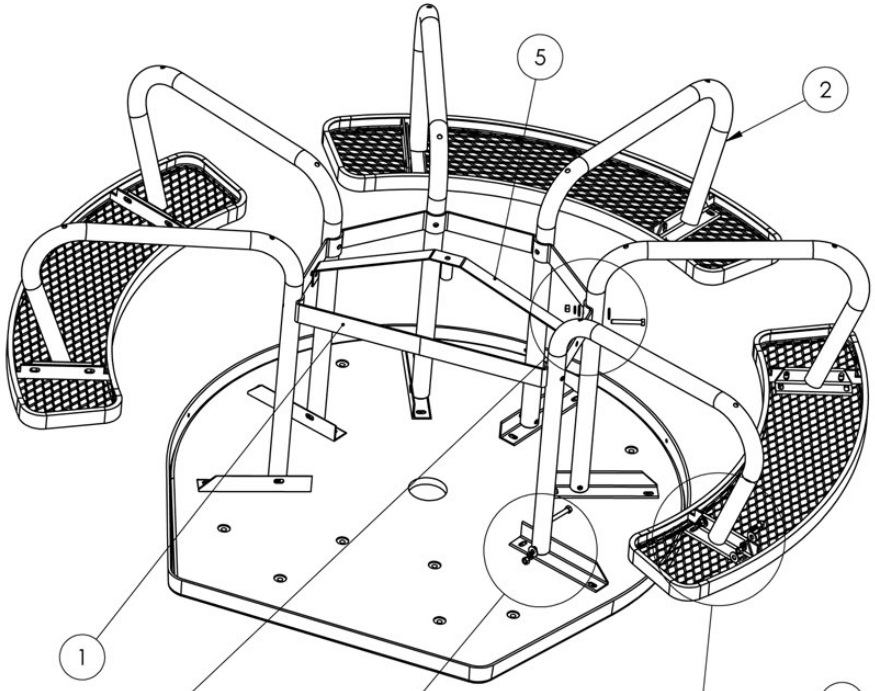

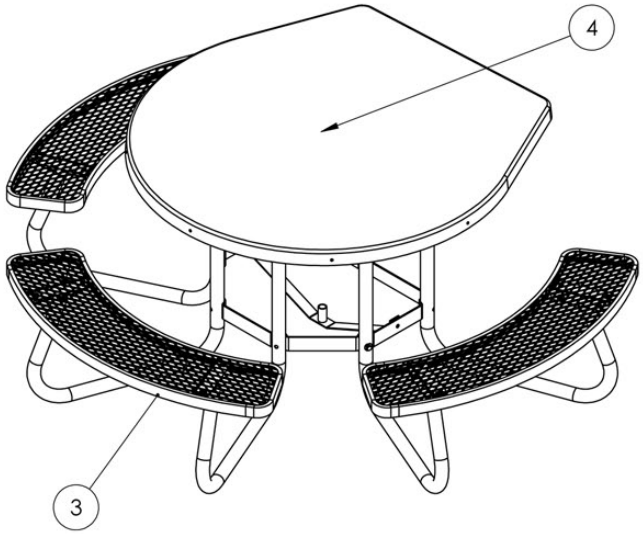

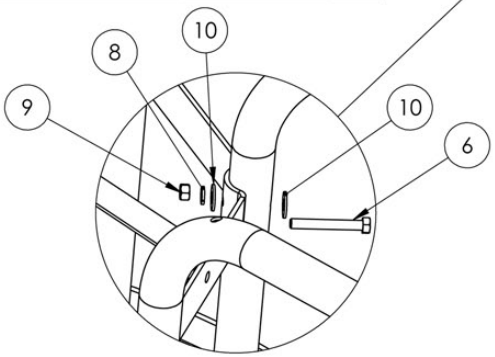

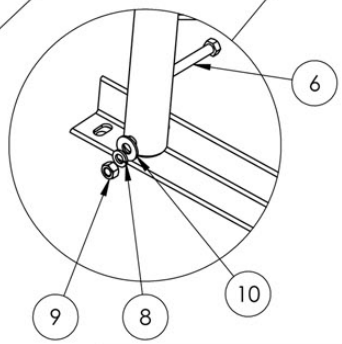

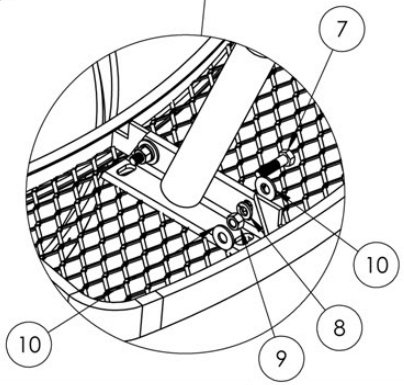

1. Lay down a protective surface, such as the box it was delivered in, and turn table top upside down on it. All connections are finger tight only, until the table is fully assembled.

2. Attach the table legs, one at a time, to the sides of the support bars in the table top. Use a 3/8" x 2 3/4" hex bolt with a flat washer on each side and a lock washer and nut. Be sure that each leg is on the same side of the support bars as you go around the table.

3. Attach the "D" ring to one of the legs, the same as in step 3. Be sure the "D" ring is placed as shown, with the flat side facing the space without the legs.

4. Now bring the rest of the legs up, one at a time and attach to the "D" ring the same way using 3/8" x 2 3/4" hex bolt with a flat washer on each side and locknut.

5. Attach the seats to the sides of the seat mounting angles on the legs with two 1 1/2" hex bolts with flat washers on each side and lock washer and nut per leg. (Four bolts per seat)

6. Tighten all the bolts. Turn the entire assembly right side up (2 people are needed for this).

GENERAL NOTES:

UNLESS OTHERWISE SPECIFIED:
DIMENSIONS ARE IN INCHES
TOLERANCES:
FRACTIONAL ± 1/32
BEND ± 1/2°
THREE PLACE DECIMAL ± .005
Do Not Scale Drawing
MATERIAL

	NAME	DATE
DRAWN	DAT	8/28/2014
CHECKED		
ENG APPR.		
MFG APPR.		
Last Saved	9/2/2014 6:58:16 AM	

COMMENTS:

TITLE:

DESC. HC TABLE- PAINTED FRAME W/ VP SEATS FIBERGLASS TOP-ADA

S:\CADDRWGS\Solidworks\Tables\RTR\

SIZE B | PART NO. RTRCFVPSADA | REV

SHEET 1 OF 1

Path to Part or Assy - RTRCFVPSADA S:\CADDRWGS\Solidworks\Tables\RTR\ Default

Confidential Drawing and Information is Not to be Copied or Disclosed to Others without the Consent of Kay Industries. Specifications are Subject to Change without Notice