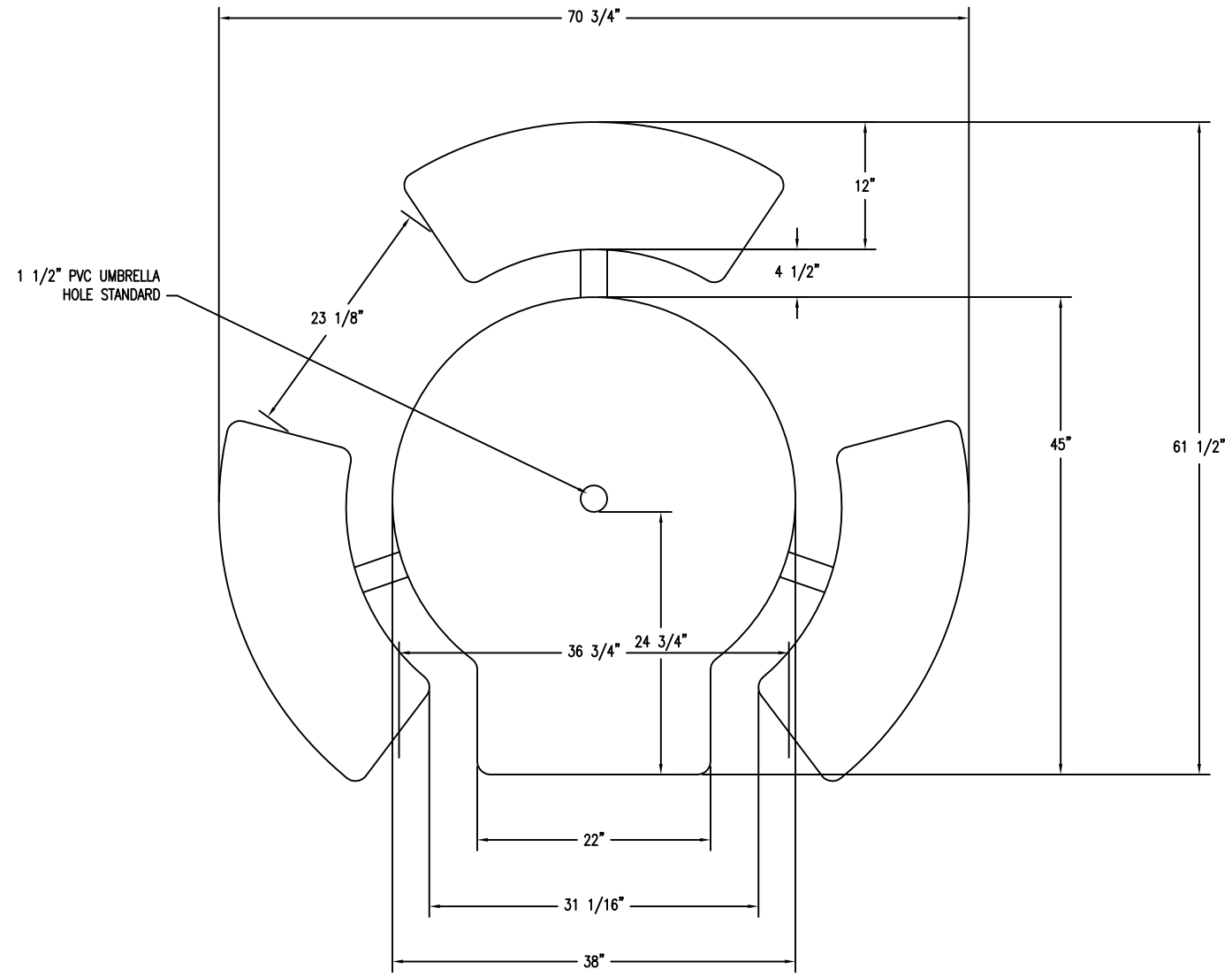

1 TOP VIEW

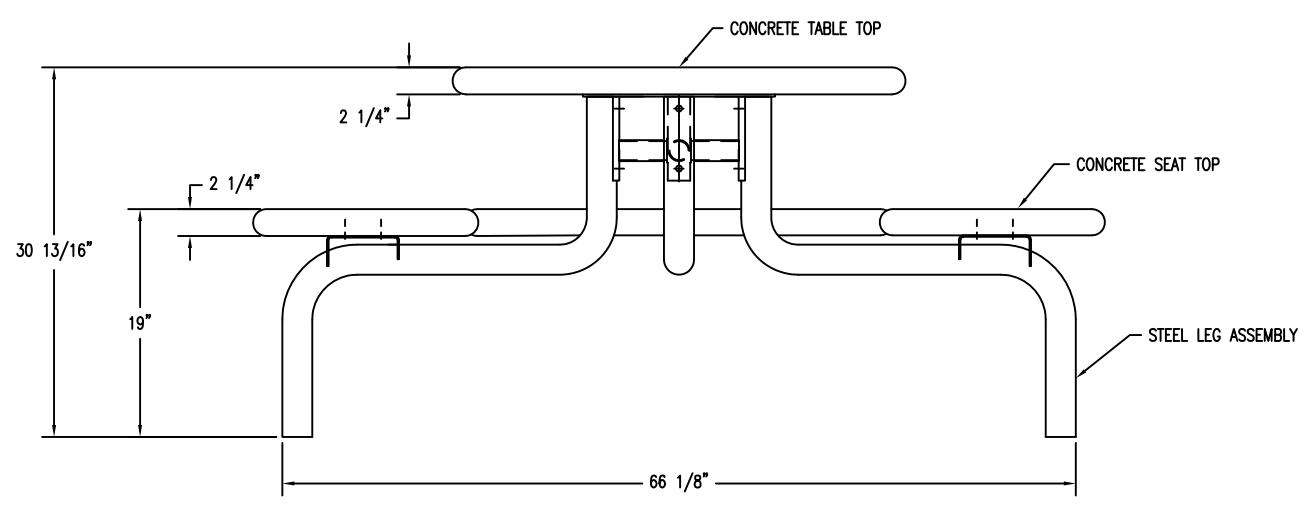

2 SIDE VIEW

PARTS LIST			
ITEM	DESCRIPTION	QTY	PART #
1	METAL TUBE LEG	3	–
2	CENTER SUPPORT	1	–
3	TABLE TOP	1	TF31392
4	SEAT TOP	3	TF31383
5	3/8"–16 X 1" BOLT	21	RM 10261

WAUSAU TILE

P.O. BOX 1520 WAUSAU, WI
54402–1520
800–388–8728
WEB SITE: WWW.WAUSAUTILE.COM

REVISIONS

	NAME	DATE	NOTES
1	---	------	---
2	---	------	---
3	---	------	---
4	---	------	---
5	---	------	---
6	---	------	---
7	---	------	---
8	---	------	---

CONFIDENTIAL INFORMATION
THESE DRAWING, SPECIFICATIONS AND OTHER INFORMATION AND DOCUMENTS ACCOMPANYING THEM ARE THE CONFIDENTIAL AND PROPRIETARY PROPERTY OF WAUSAU TILE, INC. THE DRAWINGS THEMSELVES SHALL BELONG TO THE OWNER FOR USE ONLY ON THE PROJECT. ANY ADDITIONAL USE SHALL REQUIRE THE PRIOR WRITTEN APPROVAL OF WAUSAU TILE, INC. THE PROPRIETARY INFORMATION CONTAINED WITHIN THE DRAWINGS AND THE DOCUMENTS IS AND SHALL REMAIN THE SOLE PROPERTY OF WAUSAU TILE, INC

JOB NAME

LOCATION

UNLESS OTHERWISE SPECIFIED
DIMENSIONS ARE IN INCHES
FRACTIONS +– 1/8" TOLERANCE

DRAWN BY: JPZ

DATE: 10/1/14

MATERIAL:

JOB NUMBER:

WEIGHT:

MIX DESIGN NO.

SHEET NO.

TF3139