Model Numbers:
TOT46-B-04-000 - RHINO Coating
TOT46-D-04-000 - ELITE Coating

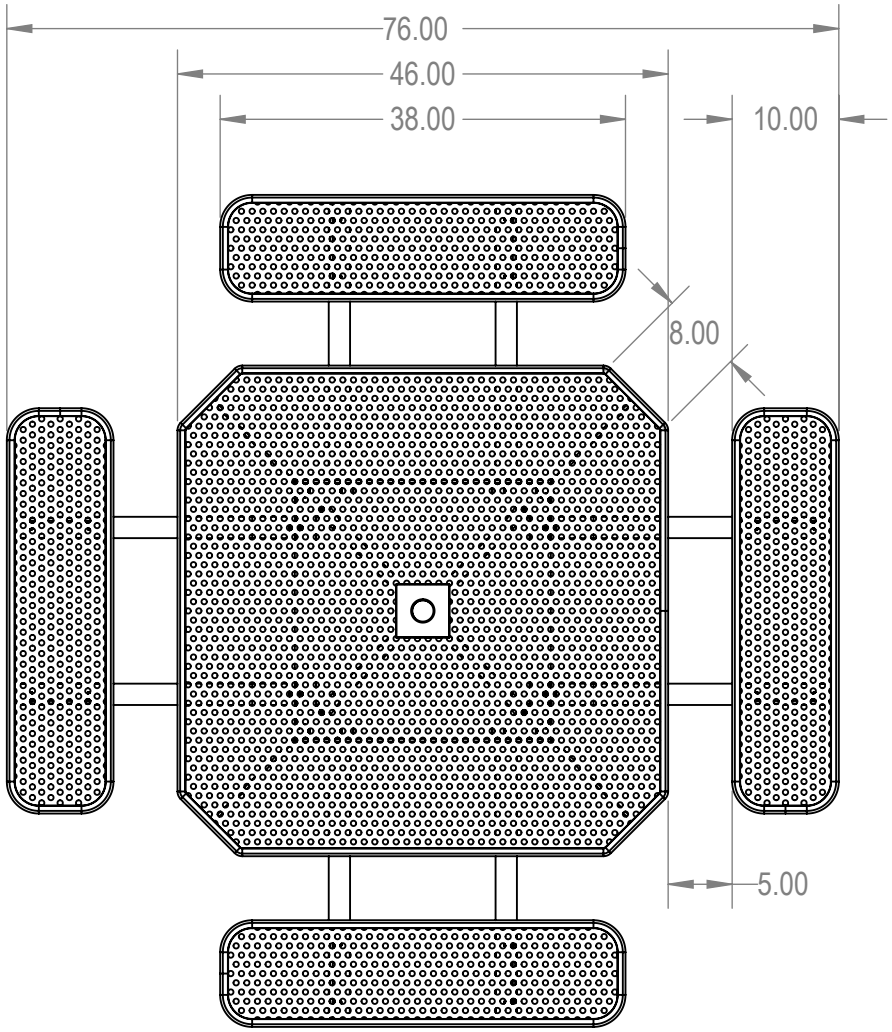

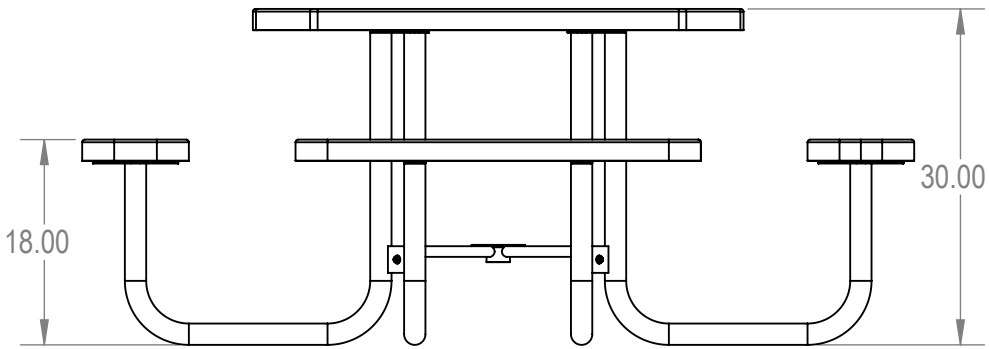

Furniture Leisure
Commercial Site Furnishings

FurnitureLeisure.com PoolFurnitureSupply.com
PicnicFurniture.com PicnicTableSupplier.com
ParkTables.com UBrace.com

1-800-213-2401 | sales@furnitureIsiesure.com

PROPRIETARY AND CONFIDENTIAL

THE INFORMATION CONTAINED IN THIS DRAWING IS THE SOLE PROPERTY OF Aadvantage Panels & Fence, Inc. PO Box 1790 Whitney, TX. ANY REPRODUCTION IN PART OR AS A WHOLE WITHOUT THE WRITTEN PERMISSION OF Aadvantage Panels & Fence, Inc. PO Box 1790 Whitney, TX. IS PROHIBITED.

	NAME	DATE
DRAWN	GM	1/8/2016
SALES APPR.		
CLIENT APPR.		
MFG APPR.		
Q.A.		

Design By -
CADWorksPro
Chicago, IL
www.cadworkspro.com

TOT46-BD-04-000

TITLE:
46" Octagon Table - Portable

Perforated Metal Version

SIZE	DWG. NO.	REV
A		

WEIGHT: SHEET 3 OF 3

5 4 3 2 1