Model Numbers:

BMD06-B-60-000 - RHINO Coating

BMD06-D-60-000 - ELITE Coating

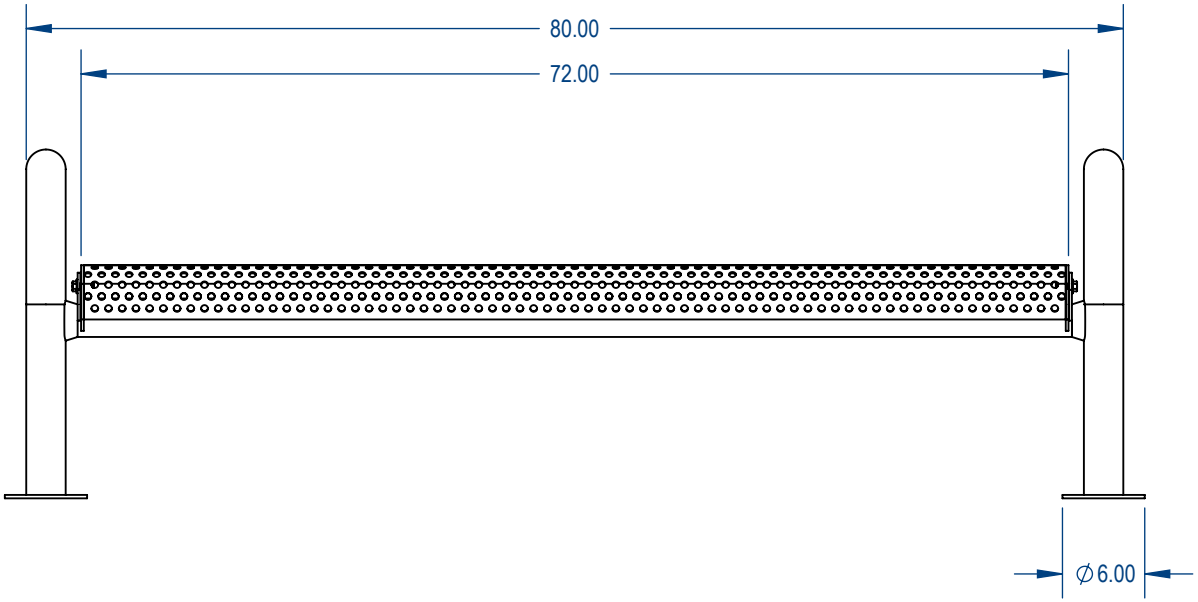

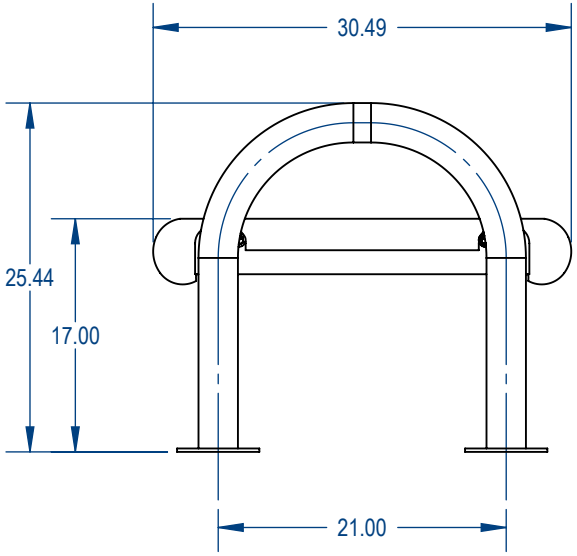

Furniture Leisure
Commercial Site Furnishings

FurnitureLeisure.com PoolFurnitureSupply.com
PicnicFurniture.com PicnicTableSupplier.com
ParkTables.com UBrace.com

1-800-213-2401 | sales@furnitureIsiesure.com

PROPRIETARY AND CONFIDENTIAL

THE INFORMATION CONTAINED IN THIS DRAWING IS THE SOLE PROPERTY OF Aadvantage Panels & Fence, Inc. PO Box 1790 Whitney, TX. ANY REPRODUCTION IN PART OR AS A WHOLE WITHOUT THE WRITTEN PERMISSION OF Aadvantage Panels & Fence, Inc. PO Box 1790 Whitney, TX. IS PROHIBITED.

	NAME	DATE
DRAWN	GM	6/14/2017
SALES APPR.		
CLIENT APPR.		
MFG APPR.		
Q.A.		

Design By -

CADWorksPro design studio

gilm@cadworkspro.com
1147 Brook Forest Ave | Suite 228 | Shorewood, IL 60404

BMD06-BD-60-000

TITLE:

Modern Bench - Perforated

Surface Mount Version

SIZE	DWG. NO.	REV
A	MBP-002	

WEIGHT: SHEET 2 OF 3

5 4 3 2 1