Model Numbers:

BRT04-A-20-000 - RHINO Coating
BRT04-C-20-000 - ELITE Coating

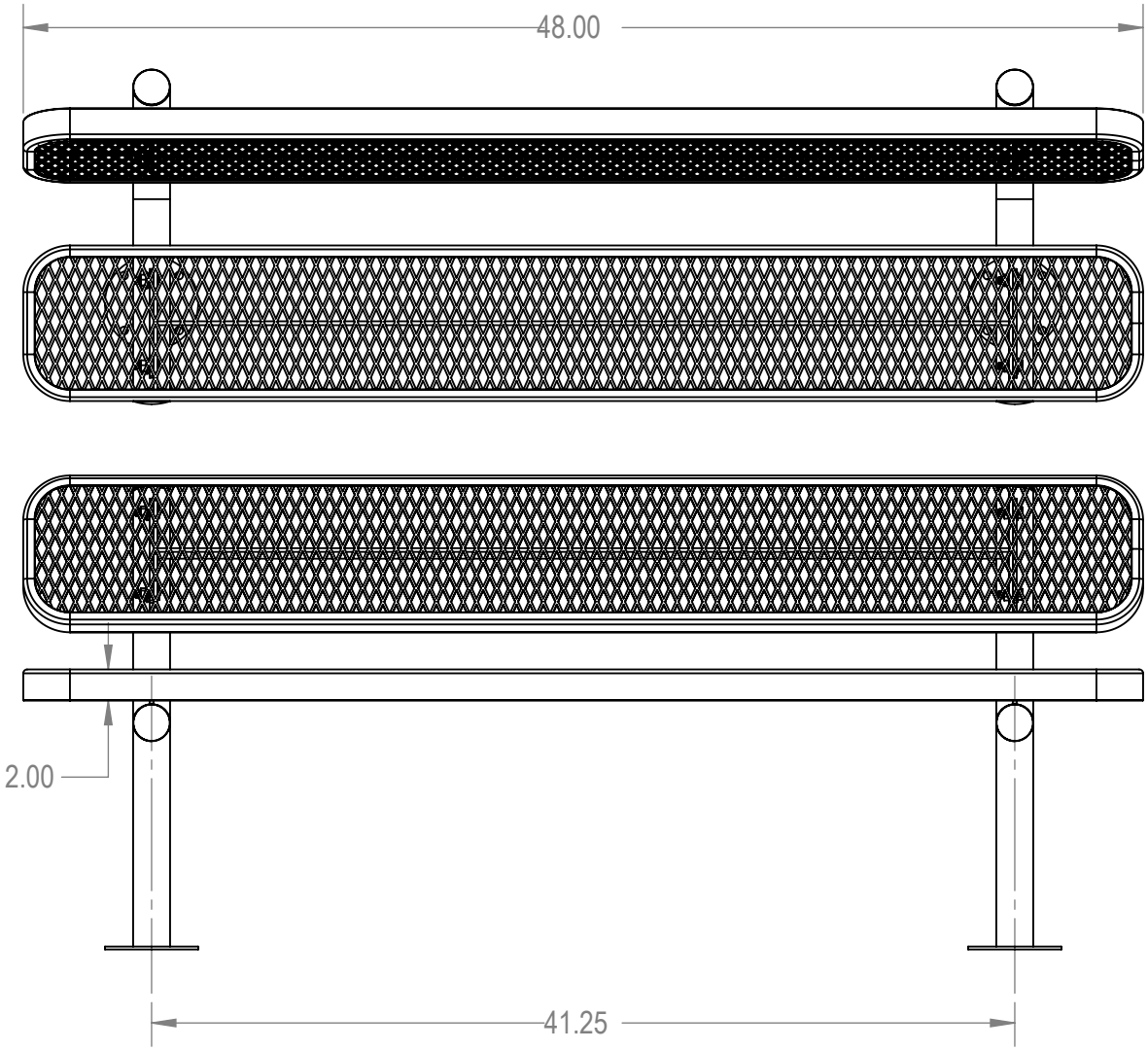

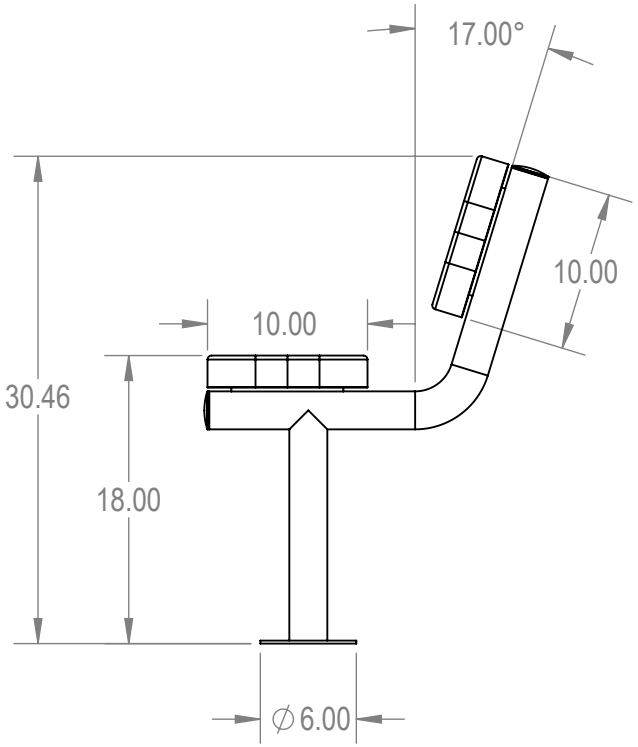

Furniture Leisure
Commercial Site Furnishings

FurnitureLeisure.com PoolFurnitureSupply.com
PicnicFurniture.com PicnicTableSupplier.com
ParkTables.com UBrace.com

1-800-213-2401 | sales@furnitureIsiesure.com

PROPRIETARY AND CONFIDENTIAL

THE INFORMATION CONTAINED IN THIS DRAWING IS THE SOLE PROPERTY OF Aadvantage Panels & Fence, Inc. PO Box 1790 Whitney, TX. ANY REPRODUCTION IN PART OR AS A WHOLE WITHOUT THE WRITTEN PERMISSION OF Aadvantage Panels & Fence, Inc. PO Box 1790 Whitney, TX. IS PROHIBITED.

	NAME	DATE
DRAWN	GM	1/25/2016
SALES APPR.		
CLIENT APPR.		
MFG APPR.		
Q.A.		

Design By -

CADWorksPro
Chicago, IL

www.cadworkspro.com

BRT04-AC-20-000

TITLE:

4Ft Rectangular Bench with Back Surface Mnt - Expanded Metal

SIZE	DWG. NO.	REV
A	BRT04-A-20-000	

WEIGHT: SHEET 2 OF 3

5 4 3 2 1