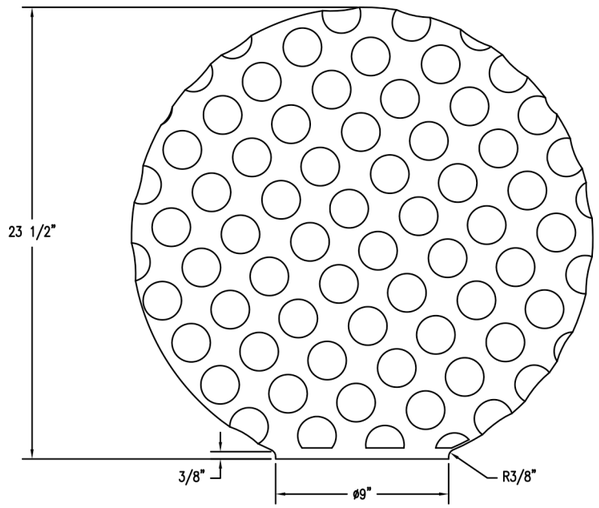

ELEVATION VIEW

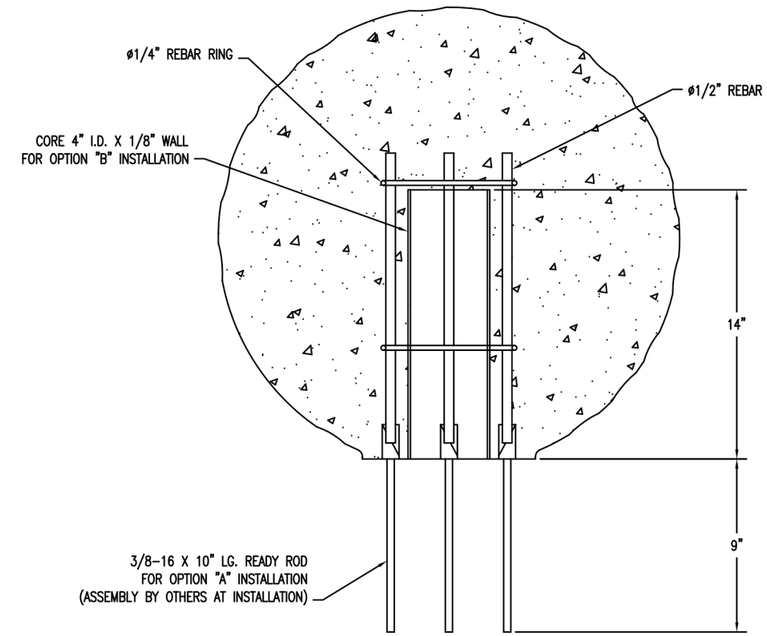

SECTION VIEW

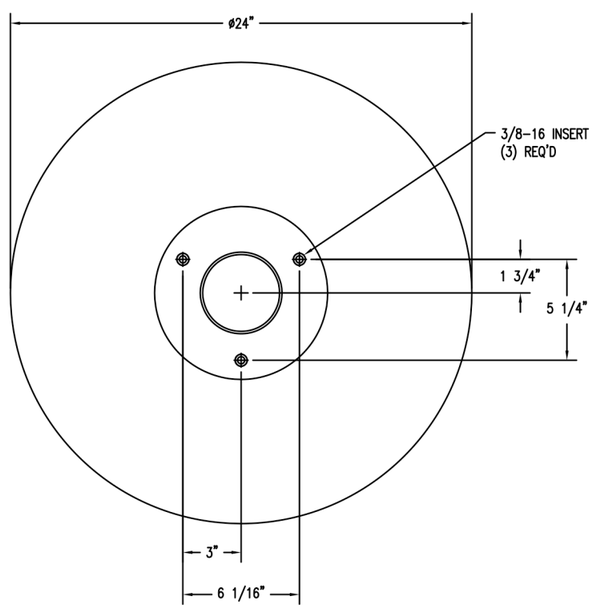

BOTTOM VIEW

FURNITURE LEISURE INC

OUR LIST OF WEB STORES

www.FurnitureLeisure.com
www.PicnicFurniture.com
www.ParkTables.com
www.PoolFurnitureSupply.com
www.PicnicTableSupplier.com
www.UBrace.com

1.800.213.2401

REVISIONS					
NO.	DATE	BY	NO.	DATE	BY
1			4		
2			5		
3			6		

DRAWN BY	MJS	JOB	
TITLE	ø24" GOLF BALL BOLLARD	JOB NO.	
SCALE	1/4	UNLESS OTHERWISE SPECIFIED DIMENSIONS ARE IN INCHES ANGLES ±0.5° FRACTIONS ± 1/4 2 PL ±0.01 3 PL ±0.005	DATE 11/05/07
CHECKED	3-12-08		

MATERIAL	CONCRETE
WEIGHT	750 LBS.
FINISH OPTIONS	SMOOTH STAINED WHITE
DWG. NO.	TF6207