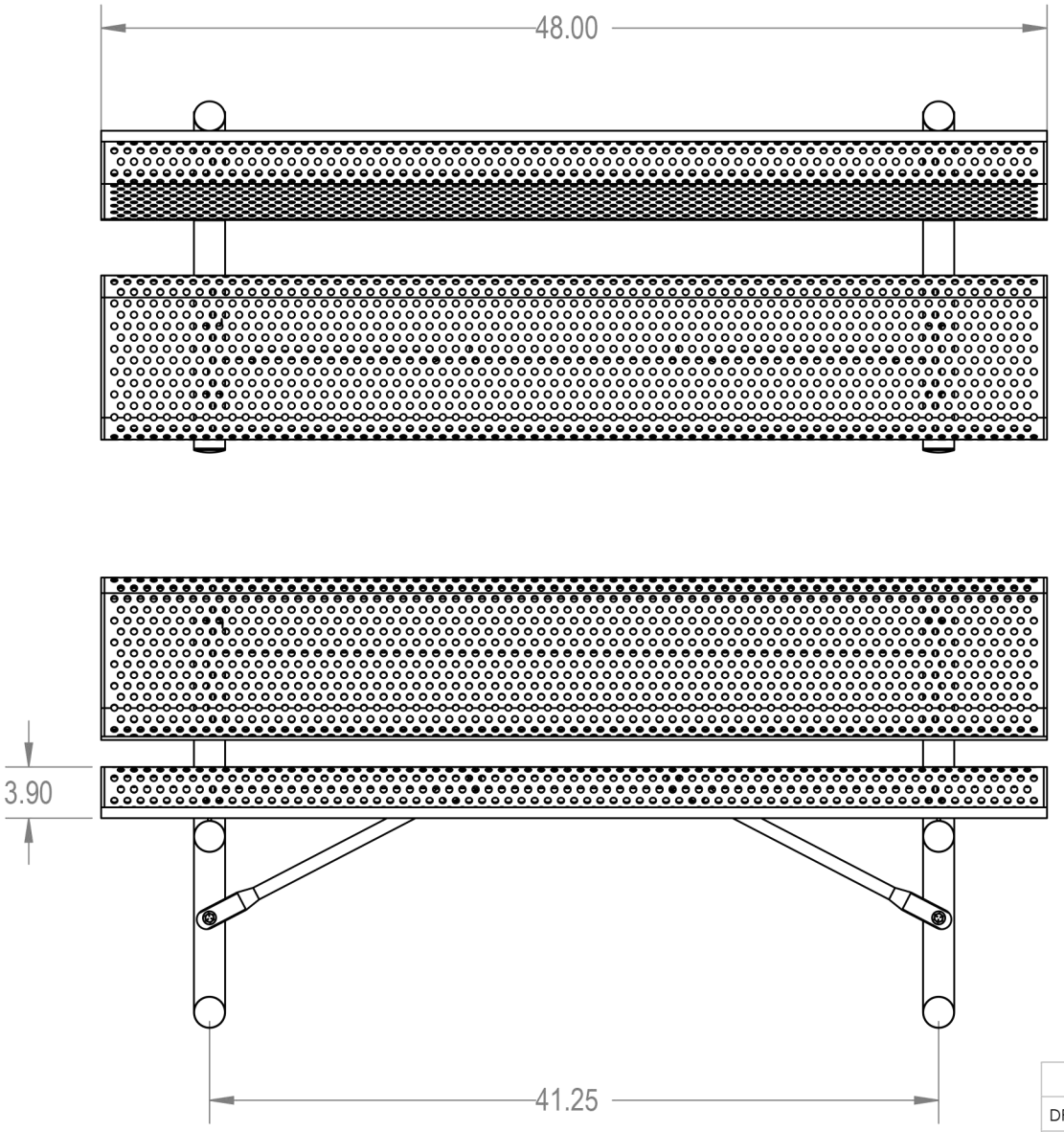

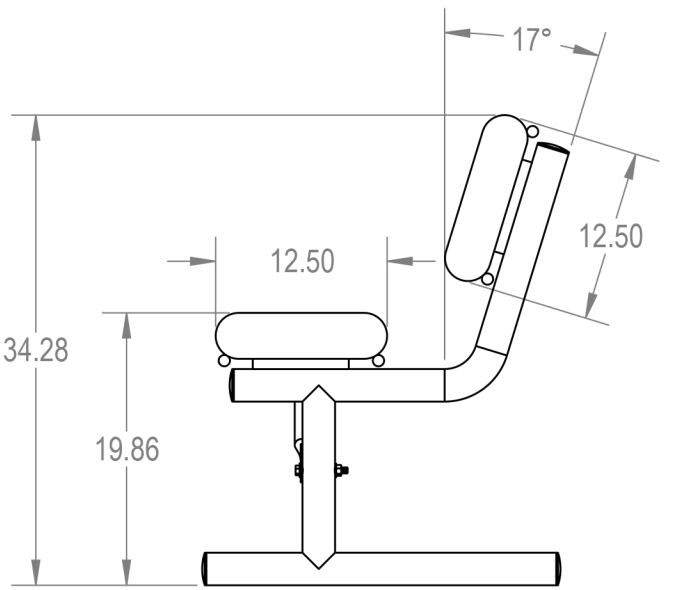

	NAME	DATE
DRAWN	GM	2/8/2015
SALES APPR.		
CLIENT APPR.		
MFG APPR.		
Q.A.		

Design By -

CADWorksPro
Chicago, IL

www.cadworkspro.com

AAdvantage Panels & Fence, Inc.

TITLE:

4Ft Rolled Bench with Back

Portable - Perforated Metal

SIZE	DWG. NO.	REV
A	BRE04-B-18-000	
	WEIGHT:	SHEET 3 OF 3

FURNITURE LEISURE INC

1.800.213.2401 | SALES@FURNITURELEISURE.COM

FurnitureLeisure.com
PicnicFurniture.com
ParkTables.com

PoolFurnitureSupply.com
PicnicTableSupplier.com
UBrace.com

5 4 3 2 1