FURNITURE LEISURE INC

1.800.213.2401

www.FurnitureLeisure.com
www.PicnicFurniture.com
www.ParkTables.com

www.PoolFurnitureSupply.com
www.PicnicTableSupplier.com
www.UBrace.com

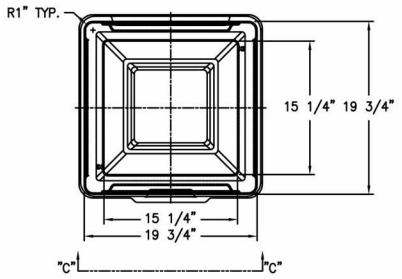

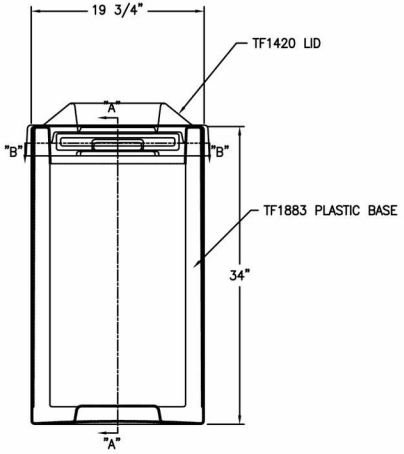

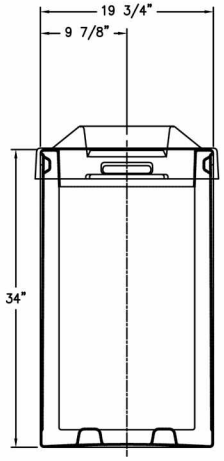

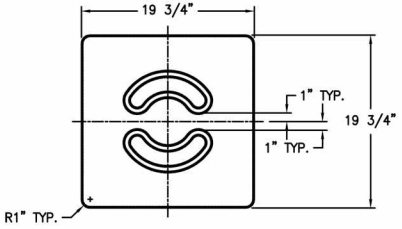

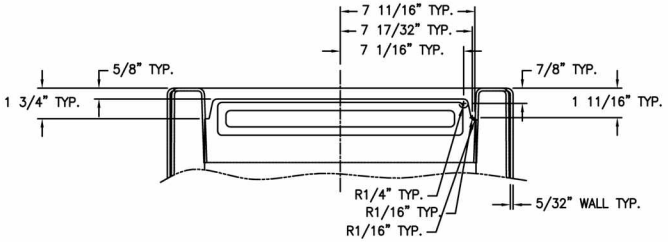

VIEW "C–C"
SCALE:
1/4" = 1'

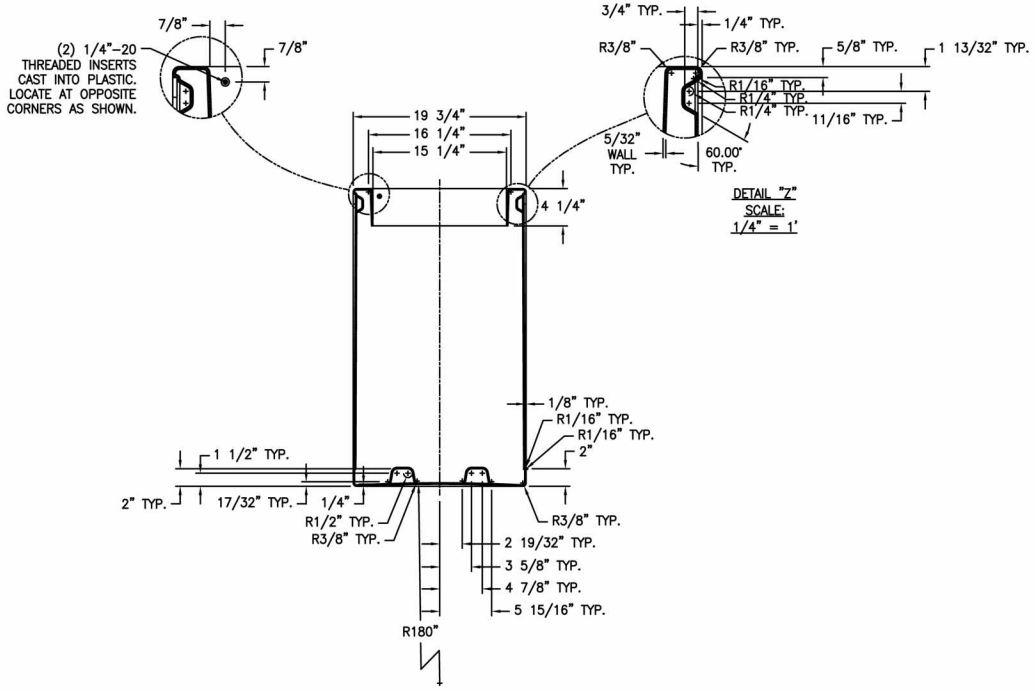

DETAIL "Z"
SCALE:
1/4" = 1'

SECTION"A–A"

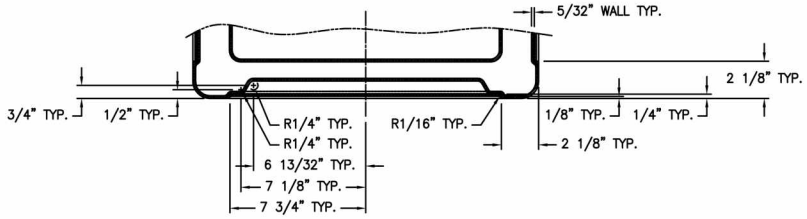

SECTION"B–B"
SCALE:
1/4" = 1'

TF1013