ITEM NO.	PART NUMBER	DESCRIPTION	SYP TREATED WOOD/QTY.
1	2BG-1	2BG LEGS 2" PS GALV 2 3/8" O.D. .109 WALL	4
2	2BG-3L	2BG SEAT CLEAT LEFT	2
3	2BG-3R	2BG SEAT CLEAT RIGHT	2
4	IBG-2	BG and 2BG TOP CLEAT	2
5	BG-5	1 5/16" OD GALV TUBE .083 WALL	2
6	Hex Bolt_AI	HEX HEAD BOLT 3/8"-16x 5 3/4"	2
7	8IBG6-7	2"x 10" TREATED SYP TOP PLANK	1
8	8IW4-7	2"x 10" TREATED SYP TOP and SEAT PLANK	4
9	RHSNBOLT 0.375-16x2.25x1-N	RH CARRIAGE BOLT 3/8"-16x 2 1/4"	22
10	RHSNBOLT 0.375-16x2.75x1-N	RH CARRIAGE BOLT 3/8"-16x 2 3/4"	12
11	LOCKW-3/8	LOCK WASHER 3/8"	36
12	HNUT 0.3750-16-D-N	HEX NUT 0.3750-16	36

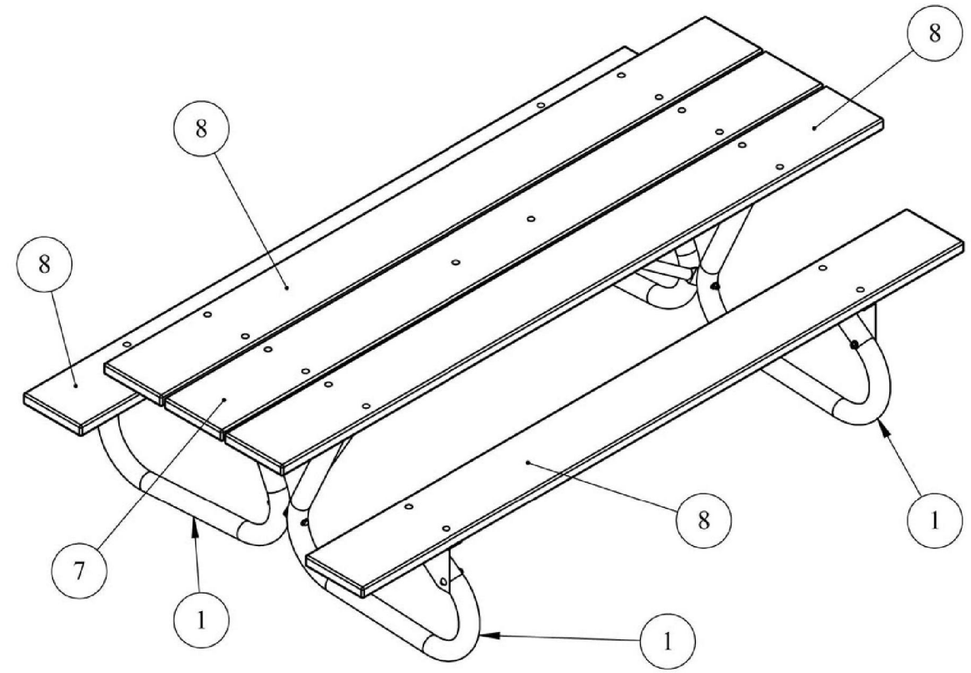

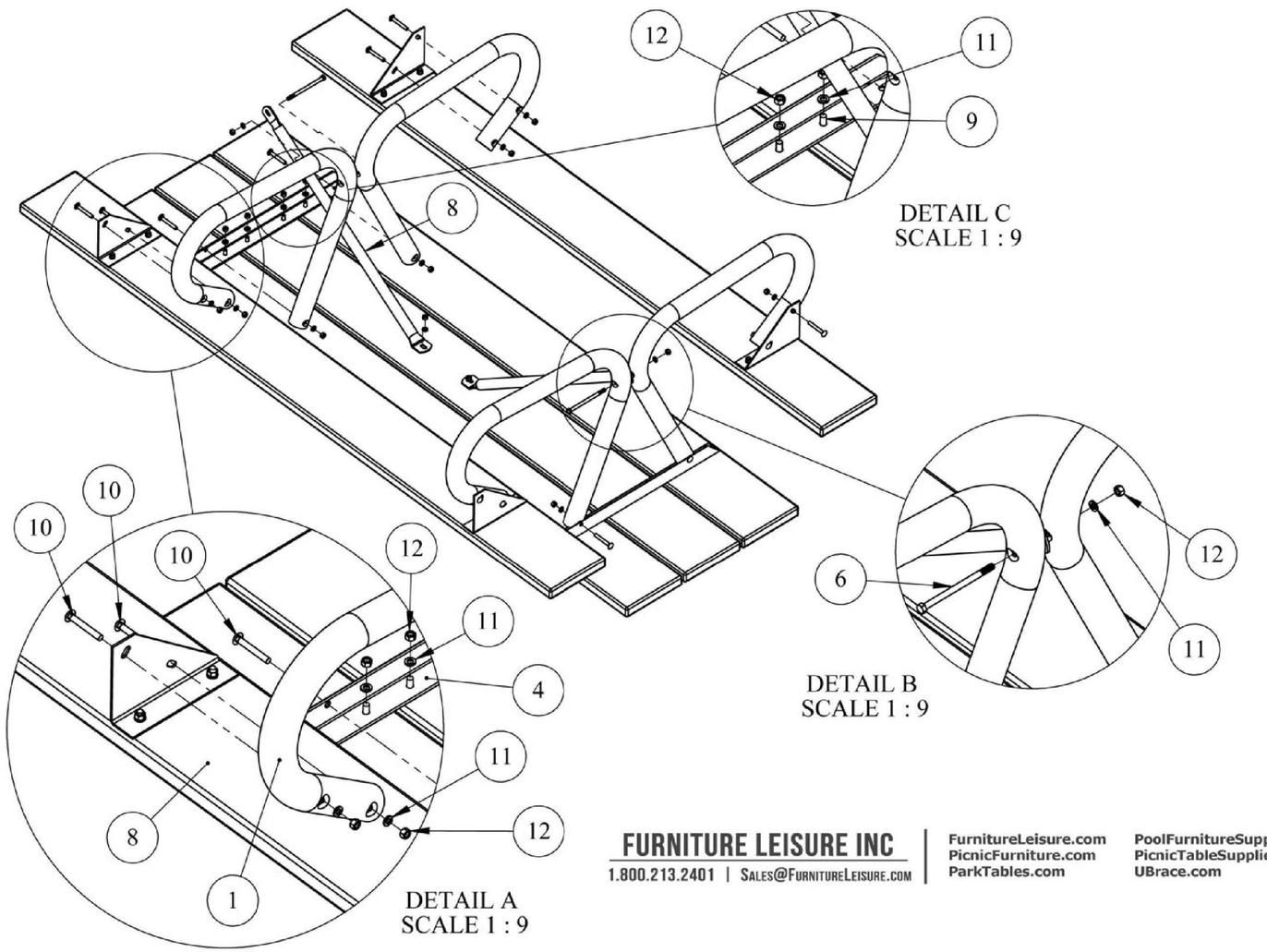

LEAVE ALL BOLTS AND NUTS FINGER TIGHTENED UNTIL ALL ARE IN PLACE

1. Lay the Table Top Planks on and Even Flat Surface with the Best Side Facing the Ground. The Middle Top Plank will have (6) Holes, (2) of the Middle Holes are 12" Apart, the Round Tube Braces will Fit There. The Remaining Planks will All Have (4) Holes.
2. There Will be (14) 3/8"Carriage Bolt x 2 1/4" Long that Hold the Top on to the Angle Iron Cleat. Fit them Into the Top Planks with the Head of the Bolt Facing the Grond. Place the Angle Iron Cleat on the Planks and Use the 3/8" Lock Washers and Nuts and Finger Tighten.
3. Attach the Legs to the Angle Iron Top Cleats with 3/8"x 2 3/4" Carriage Bolts, Lock Washers, and Nuts.
4. Place the Tube Brace as Shown, The One Flat Side that Fits Between the Legs will use a 3/8"x 5 3/4" Heax Head Bolt with Lock Washer and Nut.
5. There Will be Left and Right Seat Cleats, Fasten as Shown to the Under Side of the Seat Planks, Then Attach Them to the Legs.
6. Once All of the Hardware has Been Installed, Then Begin to Tighten the Bolts and Nuts

FURNITURE LEISURE INC
1.800.213.2401 | SALES@FURNITURELEISURE.COM
FurnitureLeisure.com
PicnicFurniture.com
ParkTables.com
PoolFurnitureSupply.com
PicnicTableSupplier.com
UBrace.com

UNLESS OTHERWISE SPECIFIED:		NAME	DATE	
DIMENSIONS ARE IN INCHES TOLERANCES: FRACTIONAL ± 1/32 BEND ± 1/2° THREE PLACE DECIMAL ± .005	DRAWN	DAT	10/6/2014	TITLE:
	CHECKED			DESC. 8 Ft GALV. TABLE FRAME and TREATED SOUTHERN YELLOW PINE
	ENG APPR.			
Do Not Scale Drawing	MFG APPR.			
MATERIAL	Last Saved	10/6/2014 1:22:27 PM		S:\CADDRWGS\Solidworks\Tables\BG\
	COMMENTS:			
SHEET 1 OF 1				SIZE B / PART NO. 82BGW / REV

CONFIDENTIAL DRAWING AND INFORMATION IS NOT TO BE COPIED OR DISCLOSED TO OTHERS WITHOUT THE CONSENT OF KAY PARK. SPECIFICATIONS ARE SUBJECT TO CHANGE WITHOUT NOTICE.

Path to Part or Assy - 82BGW S:\CADDRWGS\Solidworks\Tables\BG\ SYP TREATED WOOD