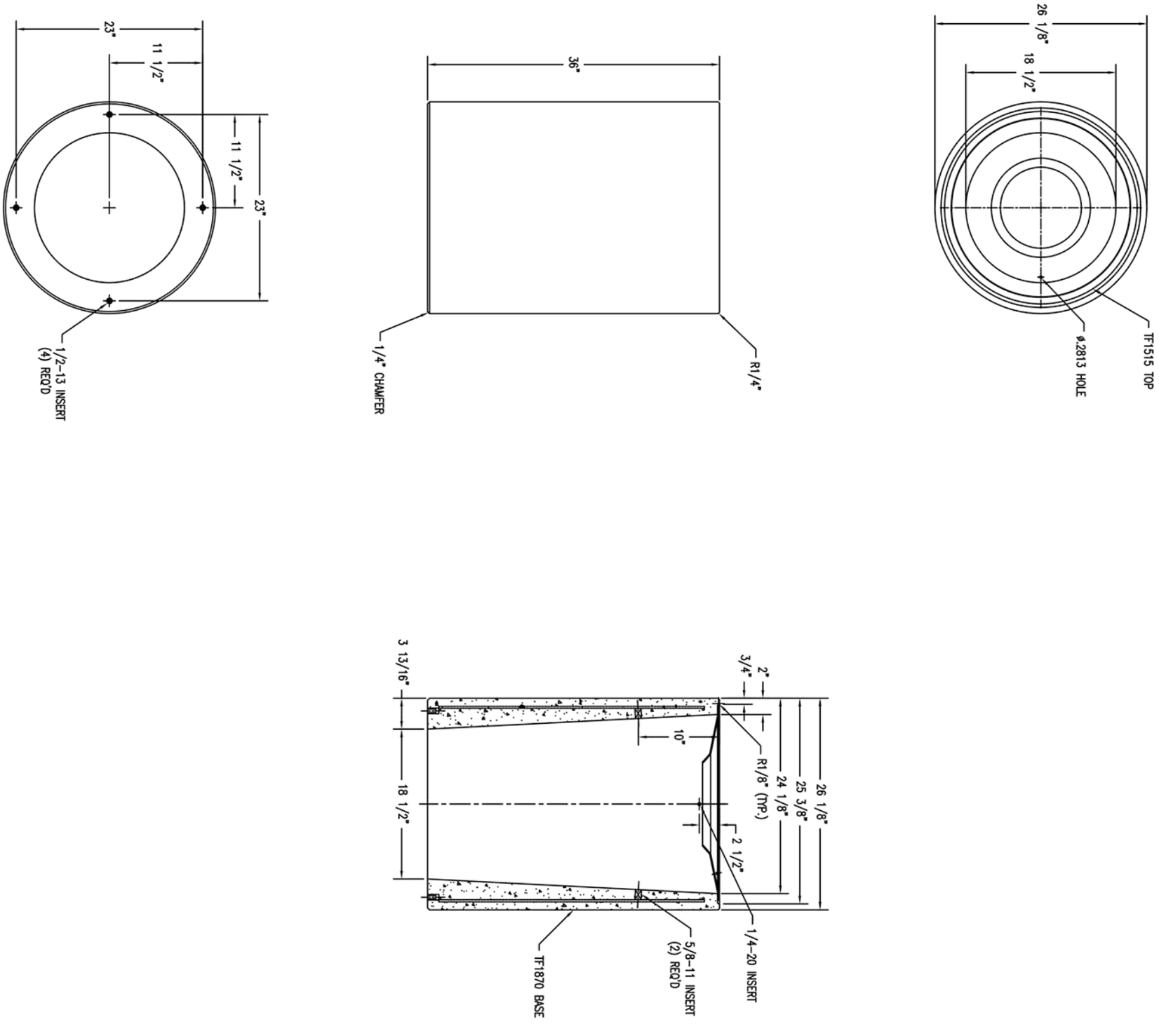
26 1/8"
18 1/2"
TF1515 TOP
Ø.2813 HOLE
36"
R1/4"
1/4" CHAMFER
23"
11 1/2"
11 1/2"
23"
1/2-13 INSERT
(4) REQ'D
26 1/8"
25 3/8"
24 1/8"
2 1/2"
2"
3/4"
R1/8" (TYP.)
1/4-20 INSERT
10"
5/8-11 INSERT
(2) REQ'D
TF1870 BASE
3 13/16"
18 1/2"